ANACONDA
FLEXIBLE METAL HOSE

CORRUGATED HOSE

STAINLESS STEEL : BW656-BW856-BW956
MONEL : BW673
BRONZE : BW794

ANAMET EUROPE

COMPANY PROFILE.

Anamet Europe BV is a specialist in the field of flexible connection and protection systems. As a part of Anamet Inc., we can support customers with our specialism all over the world.

We offer our customers solutions to questions of connecting and protecting cables, pipes and hoses.

Anamet offers metal hoses for the transport of liquids and gases together with accessory items for thermal insulation and fastening.

Anamet can provide custom designed products to meet specific customer requirements.

QUALITY ASSURANCE POLICY.

Through the implementation of our ISO 9001 quality assurance system, there is an integral system that ensures that our products meet your demands and that our internal processes and services are being improved continuously, in order to fulfil your expectations in the best possible way.

Which hose configuration is the best applicable for you, will depend on the demands you make on flexibility, durability, external parameters (working-pressure, temperature, chemical resistance, etc.) and the degree of mechanical protection.

Other products

In addition to the various hose configurations we also can offer you the respected Anaconda Sealtite® conduits, Anamet Liquidtite, Multiflex and Multitite with a complete range of fittings. For details we refer to our special catalogue for conduits.

Anamet, we support you making the right choice for the continuity of your processes!

CONTENT page

ANACONDA METAL HOSE

INTRODUCTION

ANACONDA metal hose is the leader in the flexible hose field since our beginning in 1908. ANACONDA stands for a complete line of flexible products, such as corrugated metal hose, stripwound hose, metal bellows and expansion joints, vibration eliminators, Sealtite electrical wiring conduit, and specially designed flexible connectors for many purposes.

Our leadership in the field was made possible by years of dedication to producing only the highest quality metal hose products available. Strict quality control guidelines, coupled with modern manufacturing practices and an expert team of engineers and research and development personnel, assures you of the best possible products and technical services. Special hose assemblies for unique applications can be designed by our engineering department and manufactured to meet specific customer requirements. Highly-trained sales representatives located in offices all over the world are only part of our dedicated customer service network. Contact the ANAMET representative nearest you for assistance.

ANACONDA products are manufactured by ANAMET Electrical, Inc., Mattoon, Illinois, USA; ANAMET Canada Inc., Colborne, Ontario, Canada and ANAMET EUROPE

CORRUGATED METAL HOSE

What it is..., how it is made..., where it is used...

Fig. A: corrugated metal hose

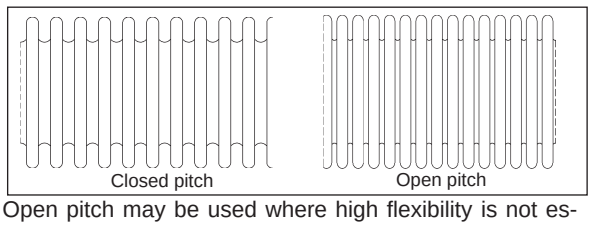

Open pitch may be used where high flexibility is not essential. Pitch can affect flexibility and it varies from one manufacturer to another. Specifications on open pitch are available by contacting your ANAMET representative.

For higher pressure applications, one or more wire braid coverings are applied to the corrugated hose. Braiding prevents hose elongation under pressure, dampens vibration and provides some mechanical protection for the inner core. Two or more braids are available to increase pressure capabilities of certain corrugated product lines; however, the deformation pressure (a point where corrugation material would yield or plastically deform) governs the maximum working pressure regardless of the number of braid layers.
A corrugated metal hose is defined as a length of tubing made flexible by forming convolutions so that it may be readily bent while remaining liquid- and gas-tight.

ANACONDA corrugated hose is made by thin wall tubing, corrugated into annular profiles. The annular hose profile (Fig. A) is designed so that each convolution is a complete circle or ring in itself.

Corrugated hose is pressure tight and is particularly adapted to continuous flexing or vibration. It is available in closed pitch or open pitch. Closed pitch is standard, unless otherwise specified.

TEMPERATURE CORRECTION FACTORS

Table "T"

TEMP. °C	STEEL	AISI 304	AISI 321	AISI 316L	MONEL	BRONZE
-20/-200	-	1	1	1	1	1
20	1	1	1	1	1	1
50	0,98	0,90	0,93	0,90	0,96	0,95
100	0,90	0,73	0,83	0,73	0,87	0,86
150	0,89	0,66	0,78	0,67	0,83	0,82
200	0,86	0,60	0,74	0,61	0,80	0,75
250	0,82	0,55	0,70	0,58	0,79	-
300	0,76	0,51	0,66	0,53	0,79	-
350	0,73	0,49	0,64	0,51	0,79	-
400	0,70	0,48	0,62	0,50	0,79	-
450	0,41	0,46	0,60	0,49	-	-
500	0,24	0,46	0,59	0,47	-	-
550	-	0,46	0,58	0,47	-	-
600	-	-	0,34	0,25	-	-
650	-	-	0,19	-	-	-

As the service temperature increases, a hose assembly maximum pressure rate decreases. The maximum allowable pressure of the hose assembly shall be the lowest of any method of assembly (mechanical, soldered, welded, silver brazed). By using the factors given in the left chart, the approximate safe working pressure, at elevated temperatures, can be calculated for assemblies with welded or mechanically attached fittings.

Example

Given:	Maximum operating temperature 350°C Maximum operating pressure 30 bar.
Determine:	Is 20 mm BW656-1S (hose AISI 316L with braid AISI 304) with welded steel fittings satisfactory for the given operating conditions?
	From the hose capability chart the working pressure for 20 mm BW656-1S is 70 bar. The largest correction factor at 350°C is now determined, in this case 0,49 for the AISI 304 braid (see table).
Calculation:	70 bar x 0,49 indicates an allowable working pressure of 34,3 bar at 350°C.
Solution:	The hose BW656-1S will meet the required conditions outlined above.

ENGINEERING DATA

QUALITY ASSURANCE

Within ANAMET EUROPE B.V. quality assurance is integrated in the corporate philosophy and adopted by all levels of the company.

The objective of the company's Quality Assurance Programme is to attain a quality level conform to ISO-9001.

In addition to the requirements and specifications of the end-users ANAMET produces in conformity with international regulary standards of independant classification authorities.

Laboratory for special test procedures, materials tests, calibration, etc..

ANAMET EUROPE B.V. is since May 28th, 2002 certified by "Stoomwezen B.V." to produce flexible hoses accordingly to the Pressure Equipment Directive (PED) 97/23/EG, even up to category II.

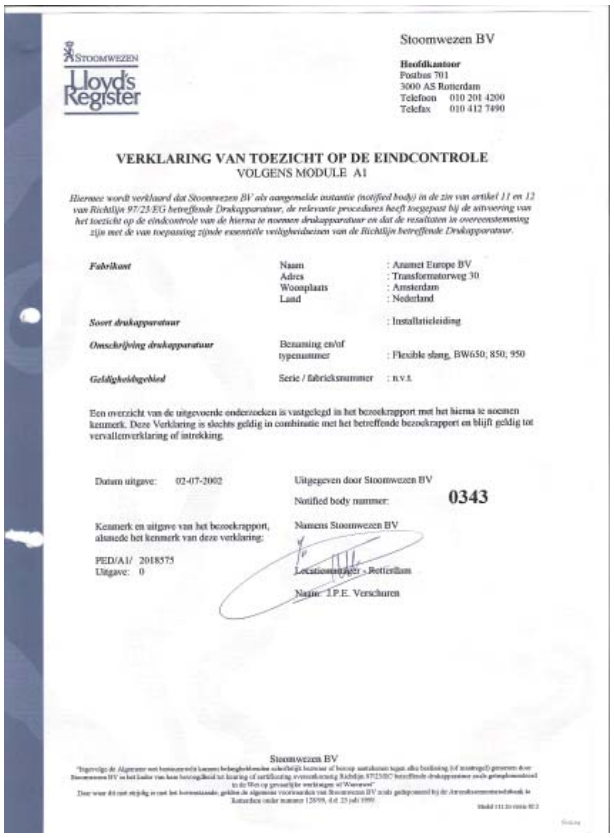

Stoomwezen BV

Hoofdkantoor
Postbus 701
3000 AS Rotterdam
Telefoon 010 201 4200
Telefax 010 412 7490

VERKLARING VAN TOEZICHT OP DE EINDCONTROLE
VOLGENS MODULE A1

Hiermee wordt verklaard dat Stoomwezen BV als aangemelde instantie (notified body) in de zin van artikel 11 en 12 van Richtlijn 97/23/EG betreffende Drukapparatuur, de relevante procedures heeft toegepast bij de uitvoering van het toezicht op de eindcontrole van de hierna te noemen drukapparatuur en dat de resultaten in overeenstemming zijn met de van toepassing zijnde essentiële veiligheidseisen van de Richtlijn betreffende Drukapparatuur.

Fabrikant	Naam	: Anamet Europe BV
	Adres	: Transformatorweg 30
	Woonplaats	: Amsterdam
	Land	: Nederland
Soort drukapparatuur		: Installatieleiding
Omschrijving drukapparatuur	Benaming en/of typenummer	: Flexible slang, BW650; 850; 950
Geldigheidsbegeled	Serie / fabricksnummer	: n.v.t.

Een overzicht van de uitgevoerde onderzoeken is vastgelegd in het bezoekrapport met het hierna te noemen kenmerk. Deze Verklaring is slechts geldig in combinatie met het betreffende bezoekrapport en blijft geldig tot vervaltenverklaring of intrekking.

Datum uitgave: 02-07-2002

Uitgegeven door Stoomwezen BV
Notified body nummer: **0343**

Kenmerk en uitgave van het bezoekrapport, alsmede het kenmerk van deze verklaring:

PED/A1/ 2018575
Uitgave: 0

Namens Stoomwezen BV

Locatiemanager Rotterdam

Naam: J.P.E. Verschuren

Stoomwezen BV

Anamet Europe b.v. cooperates with the following classification authorities for type approval or acceptance testing of its high quality products.

ENGINEERING DATA

HOSE ASSEMBLY DESIGN CONSIDERATIONS

Flow velocity

Extremely high conveyant velocities in corrugated hose should be avoided as the corrugations could be forced into resonant vibration resulting in premature fatigue failure.
Consult your ANAMET representative for applications involving flow velocities in excess of 35 m/s for braided hose and 6 m/s for unbraided hose.

Temperature

As the temperature of metal hose increases, the pressure capability decreases. The factors shown of tabel “T” should be used to adjust the pressure capabilities at higher temperatures

Pressure

Pressures capabilities shown in the various hose tables are based on constant pressures.
For pulsating or shock pressures consult your ANAMET representative.

Corrosion

Recommended alloy selection to provide satisfactory performance with various media can be found in tabel “M”.

Motion movement

“LENGTH”-The active or exposed length of a hose assembly must be sufficient to meet the conditions of movement. Lengths shorter than suggested can result in premature fatigue failure. Length tolerances as per our Quality Assurance Programme.

“BEND RADIUS”-The bend radius shown in the various hose tables are adequate to meet most industrial flexing requirements. Consideration should be given to those applications involving levels of high frequency or large amounts of travel by increasing the bend radius. Avoid sharp bends except where the installation is permanent and no additional flexing is expected. To prevent overbending of the hose, an overall casing can be used.

“INSTALLATION PRECAUTIONS”-Hose assemblies must be installed so that all motion/movement is in the bending plane. Metal hose when flexed out of its bending plane will be subjected to torsion/twisting which develops a shear stress that can produce early hose failures. Braided hose must not be subjected to axial motion. Extension will result in preloading the braid. Compression will cause braid slack and can result in squirm of the corrugated core.

“ABRASION”-Allow for sufficient clearance so that hose in motion will not come in contact with adjacent objects. Where abrasion cannot be avoided, an overall casing is required to protect the hose from external damage.

Safety factor

We suggest that the maximum working pressures be no more than 25% of the rated burst pressure of the hose assembly after correcting for service temperature. Circumstances may require safety factors greater than 4 :1.

Testing

Depending on diameter, length, pressure, type of hose and end fitting design, hose assemblies are tested in various ways. It is ANAMET’s standard practice to test assemblies by using one or more of the following methods: vacuum, hydrostatic, pneumatic or dye penetrant. Test media include: air, nitrogen, helium, water or oil.
If special testing is required, it must be detailed at the time of an inquiry.

Tolerances

The standard tolerances used by ANAMET are found to be acceptable by most users. When tolerance considerations are critical, consult your ANAMET representative.

Cleaning

Depending on the medium being conveyed, special cleaning practices are sometimes necessary. ANAMET has special cleaning procedures where cleaning to standard commercial levels is not acceptable. Where special cleaning is necessary, detailed requirements must be clearly specified.

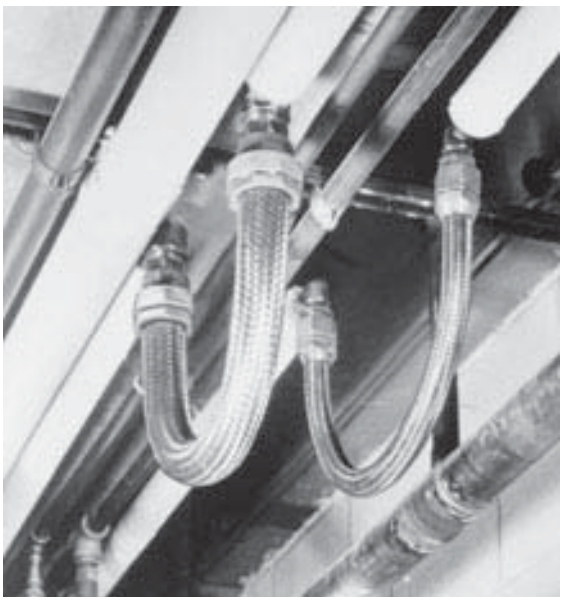

Typical example of axial movement in overhead heating piping absorbed by correct designed corrugated bronze hose assemblies.

ENGINEERING DATA

IMPORTANT POINTS WHEN INSTALLING HOSE ASSEMBLIES

RIGHT WRONG

AXIAL LOAD
Axial compression may lead to squirm the corrugated hose. Axial tension lowers the pressure capacity of braided hose.

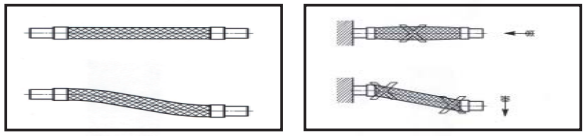

BENDING
Install a hose in its most natural loop. Overbending lowers the pressure capacity and the cycle life

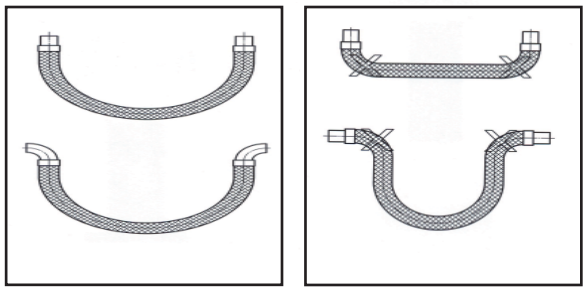

WEIGHT
The weight of the hose and the medium must be supported adequately.

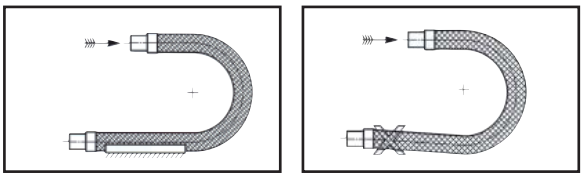

TORSION
Torsion must be avoided. Torsion occurs when the movements are not in the same plane as the fittings.

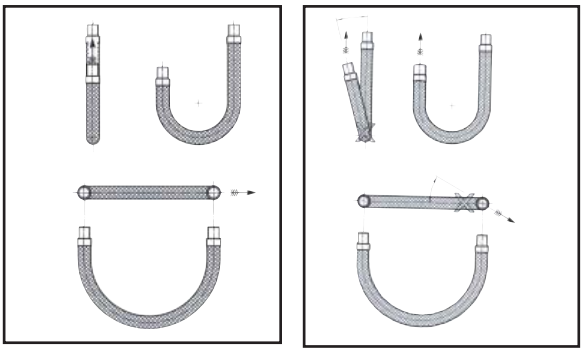

INSTRUCTIONS FOR SELECTION, INSTALLATION AND MOUNTING

The life time of metal hoses will increase when next instructions are followed:

1. Select the right fittings
   Whenever possible select at least one swivel fitting or a floating flange. This avoids torsion problems during installation.

2. Do not overbend the hose (check technical data)
   Avoid overbending, specially close to the fittings. Install the hose in its most natural position, free of kinks and sharp bends.

3. Do not torque a corrugated metal hose
   Torsion can have dramatic consequences on the life of a corrugated metal hose. Torsion occurs when the movements are not in the same plane as the fittings. Use two keys when fixing swivel nuts.
   Note: Stripwound hose can absorb some torsion.

4. Avoid scratching over rough surfaces
   The braiding is the essential part of a hose assembly to withstand the internal pressure. A damaged braid diminishes the pressure capacity of the assembly and is detrimental to its function.

5. Avoid exposure to weld or grinding splatters
   Weld or grind splatters may lead to corrosion of the stainless steel parts. Use a heat proof shield (no plastic!) during welding or grinding in the proximity of metal hoses.

ENGINEERING DATA

DETERMINING MINIMUM OVERALL LENGTH OF HOSE ASSEMBLIES FOR INTERMITTENT FLEXURE

From the “minimum c/l bend radius for flexing bend” column in the hose specifications, obtain the proper bend radius for the type and size of hose chosen. Use the formulas below to calculate the length “A” of the exposed hose required. Determine the overall length of fittings from fitting specification pages and add to the exposed length of hose “A” to arrive at the assembly overall length. Distance between end connections should be such that there is no stress on the hose in the extreme offset position.

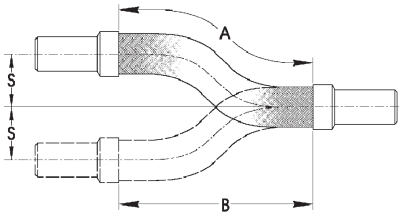

FOR INTERMITTENT FLEXURE

Use formulas and table for “K” below to determine the required hose length

Formula

$A = 2{,}8\sqrt{R_h \times 2S}$

$B = K \times A$

* When $S \leqslant 0{,}5R_h$,otherwise another installation is required.

In order to find the overall length, add the length of the fittings to the calculated length “A”.

Example

Hose nominal I.D. 32 mm.
Type BW656-1S, min. c/l bend radius for flexing bend R_h = 230 mm from table. Desired movement S = 80 mm, $0{,}5R_h = 0{,}5 \times 230 = 115 \Rightarrow S(=80) \leqslant 115 \Rightarrow$ is allowed.

Calculation

$A = 2{,}8\sqrt{230 \times 2 \times 80} = 537$ mm

A/S = 537 / 80 = 6,71 K = 0,988 (see table”K”)

B = 0,988 x 537 = 531 mm

FOR NON-MOVING OFFSET INSTALLATIONS

Use formulas and table for “K” below to determine the required hose length “A”.

Formula

$A = 2\sqrt{R_e \times 2S}$

$B = K \times A$

* When $S \leqslant 1{,}5R_e$,otherwise another installation is required.

In order to find the overall length, add the length of the fittings to the calculated length “A”.

Example

Hose nominal I.D. 50 mm.
Type BW856 -1H, min. c/l bend radius for permanent bend R_e = 140 mm from table. Desired movement S = 120 mm, $1{,}5R_e = 1{,}5 \times 140 = 210 \Rightarrow S(=120) \leqslant 210 \Rightarrow$ is allowed.

Calculation

$A = 2\sqrt{140 \times 2 \times 120} = 366$ mm

A/S = 366 / 120 = 3,05 K = 0,930 (see table “K”)

B = 0,930 x 366 = 340 mm

EXPLANATION OF FORMULA

A = Exposed length of hose
B = Installed length of hose (as illustrated)
S = Lateral movement

K = Factor, see table below
R_h = min. c/l bend radius for flexing bend
R_e = min. c/l bend radius for permanent bend

TABLE FOR K

A/S	2	2,5	3	3,5	4	4,5	5	6	7	8	9	10	11	12	13	⩾ 14
K	0,825	0,897	0,928	0,947	0,960	0,970	0,975	0,985	0,990	0,993	0,994	0,995	0,996	0,997	0,997	0,998

ENGINEERING DATA

VERTICAL LOOP FOR MAXIMUM VERTICAL TRAVEL

The illustration at the right shows the proper method of installing hose in vertical loops.
The formula and the table for “B” will aid in determining the overall length of an assembly.

Formula

Overall length= B + 0,5 π. A + 0,5S

Data
Using 25 mm type BW856-1H hose with fittings attached.

Example

A = 230 x 2 = 460 mm (2x “minimum c/l bend radius for flexing bend”, see table type BW856).

B = 410 mm (from table “B”)
S = 200 mm (desired movement)

Overall length=

410 + 0,5 π . 460 + 100 = 1232,6 mm or appr. 1235 mm.

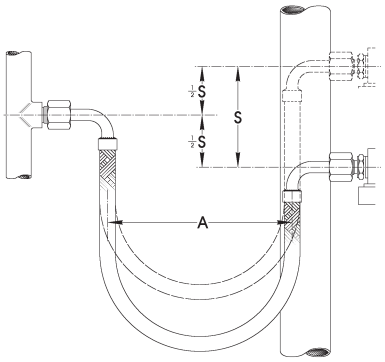

VERTICAL LOOP FOR SHORT HORIZONTAL TRAVEL

The formula and the table for “B” will aid in determining the overall length for an assembly when installed as illustrated in the drawing on the right.

Formula

Overall length = B + 0,5 π (A + S)

$$C = \frac{A + B + (0{,}5\,\pi \,.\, S)}{2}$$

Data
Using 10 mm type BW656-1S, with fittings attached.

Example
A =150 x 2 = 300 mm (2x min. c/l bend radius for flexing bend, see type BW 656).

B =280 mm (from table “B”)

S =250 mm (desired movement)

Overall length =

280 + 0,5 π (300 + 250) = 1143,9 mm or appr. 1145 mm.

$$C = \frac{300 + 280 + (0{,}5\,\pi \,.\, 250)}{2}$$

C = 486,3 mm or appr. 490 mm.

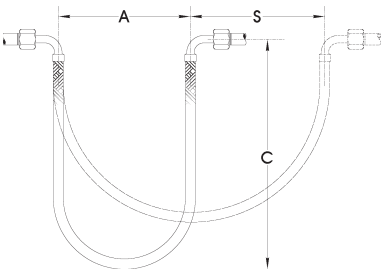

HORIZONTAL LOOP FOR MAXIMUM HORIZONTAL TRAVEL

The illustration on the right is another example of a typical installation of hose in which the movement is horizontal. The purpose of the support is to prevent the hose from sagging and causing failure near the fittings.

Formula
Overall length= B + 0,5 π . A + 0,5S

Data
Using 12 mm type BW856-1H hose with fittings attached.

Example
A = 2 x 205= 410 mm (2x “minimum c/l bendradius for flexing bend”, see type BW856)

B =310 (from table “B”)

S =desired movement 550 mm

Overall length=

310+(0,5 π . 410) +(0,5 x 550)=1229 mm or appr. 1230 mm.

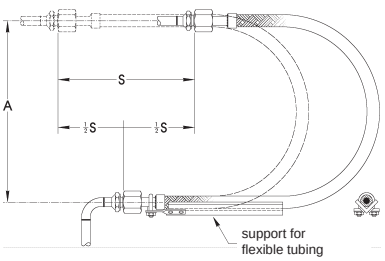

EXPLANATION OF FORMULA

A = Bend diameter (2 x R_h)
B = Factor including the length of fittings and allowance for straight sections beyond each fitting.
S = Movement

C = Required free height

R_h = min. c/l bend radius for flexing bend

R_e = min. c/l bend radius for permanent bend

TABLE FOR B

Inside hose	mm	5-8	10	12-15	20	25	32	40	50	65	75	100	125	150	200	250
Diameter	inch	1/4	3/8	1/2	3/4	1	1 1/4	1 1/2	2	2 1/2	3	4	5	6	8	10
B	mm	230	280	310	360	410	460	510	560	610	660	760	840	910	1020	1170

ENGINEERING DATA

MISALIGNMENT AND OFFSET MOVEMENTS

For intermittent offset movement consult offset formula on page 9 and the “minimum c/l bend radius for flexing bend” columns in specifications for each type and size of corrugated hose.
For misalignment and ease of installation where there is no significant movement or vibration, consult offset formula on page 9 and “minimum c/l bend radius for permanent bend” columns in specifications for each type and size of corrugated hose.

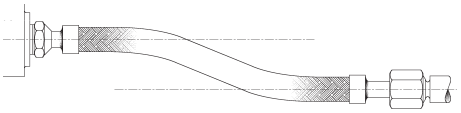

MUTIPLE MOVEMENTS

To absorb movements in several directions and at several planes, a 90° flexible hose assembly is recommend, made up out of two short flexibles which are connected by a 90° pipe angle. At both ends of the assembly swivel flanges are used for connection to the piping system. This is important in order to avoid tension of the flexible hoses during installation. The necessary length of the hoses is determined by various movements. Torsion on account of these movements will then be absorbed by the two hoses.

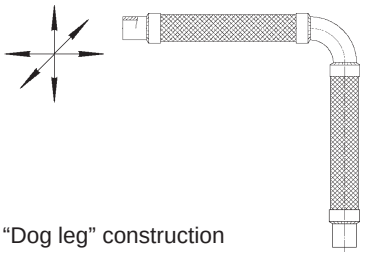

“Dog leg” construction

VIBRATION

Normal vibration encountered in average industrial applications is illustrated in the chart at the right.
Under these conditions the exposed length of hose (Dimension L, drawing at right), should never be shorter than length given in “min. exposed length for normal vibration” in specifications for each type and size of corrugated hose.

Definitions
Amplitude equals lateral displacement from c/l of hose. Double amplitude equals lateral displacement on both sides of hose or 2 times the amplitude.

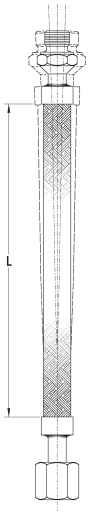

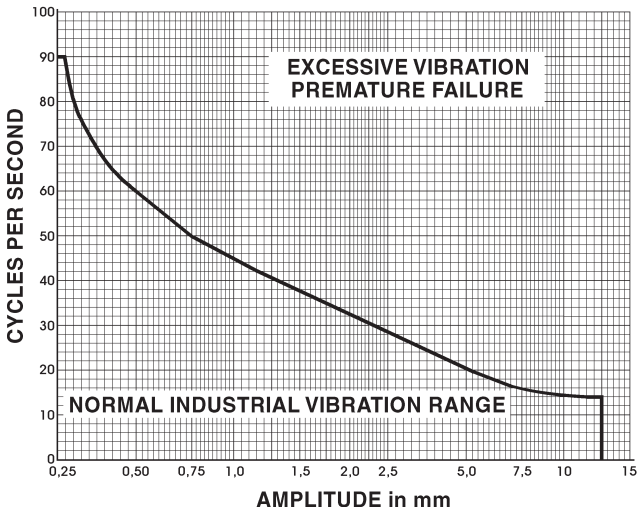

ENGINEERING DATA

CORROSION RESISTANCE TABLE

The following tables may be used only as a guide in the selection of the most suitable hose and fitting material when conveying a given medium. The listed media are in general considered to be pure, at room temperature and, unless otherwise specified, dry. A change in any one of these conditions may change the rating. No attempt has been made to account for variations in service conditions since these variables are too innumerable and complex.
Additional information on service life, etc. is keyed to the following notes. The numbers appear as superscripts to the upper right of the rating as: Acetaldehyde C^2 (bronze).
"Dry" can also be referred to as "anhydrous".
When there is a question on this reference table or you have unusual service conditions or media, contact us before ordering.

RATING CODE

A - Suitable (normal condition)
B - Limited Service
C - Unsuitable

NOTES

1. Susceptible to intergranular corrosion
2. May cause explosive reaction
3. Susceptible to stress corrosion cracking
4. Susceptible to pitting type corrosion
5. Discolors
6. Concentration over 50% and/or temperature over 95°C, refer to our engineering department.

	BRONZE	MONEL	CARBON STEEL	STAINLESS 304L/321	STAINLESS 316L
Acetaldehyde	C^2	A	B	A	A
Acetanilide	B^3	B	B	B	B
Acetic acid	C	B	C	B^1	A^1
Acetic anhydride	B	B	C	B	B
Acetone	A	A	C	B	B
Acetophenone	A	A	A	B	B
Acetylene	C^2	A	A	A	A
Acrylates	B	B	B	B	B
Acrylic acid	B	B	C	B	B
Acrylonitrile	A^4	A	A	A	A
Alcohols	A^5	A	A^5	A	A
Alum	B	B	C	B	B
Alumina	A	A	A	A	A
Aluminum acetate	B	B	C	B	B
Aluminum chloride - dry	B^1	A	B	A	A
Aluminum chloride - moist	C	B	C^3	$C^{3,4}$	C^3
Aluminum fluoride	B	B	B	C	C
Aluminum hydroxide	B	B	B	A	A
Aluminum sulfate	C	B	C	$B^{1,3}$	A^3
Ammonia - dry	A	A	A	A	A
Ammonia - moist	C^3	C	C^3	A	A
Ammonium acetate	C	A	A	A	A
Ammonium bromide	C	B	C	C^4	C^4
Ammonium chloride - dry	C^4	A	B	A	A
Ammonium chloride - moist	C^4	B	C	$C^{3,4}$	C^3
Ammonium hydroxide 6	C^3	A	B	A	A
Ammonium nitrate	C^2	C^2	C^3	A	A
Ammonium sulfate	C	B	C	C^1	B
Amyl acetate	A	A	A	A	A
Amyl alcohol	A	A	A	A	A
Amyl chloride - dry	A	A	B	A	A
Amyl chloride - moist	C	B	C	$C^{3,4}$	C^3
Aniline	C^3	A	C	B	B
Aniline dyes	C^3	A	C	B	B
Asphalt	A	A	A	A	A
Atmosphere - industrial	A	A	C	B^4	A^4
Atmosphere - marine	A	A	C	B^4	B^4
Atmosphere - rural	A	A	C	A	A
Barium carbonate	B	B	B	B	B
Barium chloride - dry	B	A	A	A	A
Barium chloride - moist	B	B	B	$C^{3,4}$	C^3
Barium hydroxide	C	B	B	B	A
Barium sulfate	B	B	B	B	B
Barium sufide	C	C	C	B	B
Beer	A	A	C	A	A
Beet sugar syrups	A	A	B	A	A

	BRONZE	MONEL	CARBON STEEL	STAINLESS 304L/321	STAINLESS 316L
Benzaldehyde	C	B	C	B	B
Benzene (Benzol)	A	A	A	A	A
Benzoic acid	A	B	C	A	A
Benzylamine	C^3	B	B	B	B
Benzyl chloride - dry	B	A	B	A	A
Benzyl chloride - moist	B	B	C	$C^{3,4}$	C^3
Black liquor, sulfate process	C	A	C	B	B
Bleaching powder - dry	B	A	C	A	A
Bleaching powder - moist	B^1	B	C	$C^{1,3,4}$	$C^{3,4}$
Borax	A	A	B	A	A
Bordeaux mixture	B	A	B	A	A
Boric acid	B	B	C	A	A
Boron trichloride - dry	B	B	A	B	B
Boron trichloride - moist	B	B	B	$C^{3,4}$	C^3
Boron trifluoride - dry	B	B	A	B	B
Brines	B	B	C	$C^{3,4}$	C^3
Bromic acid	C	C	C	C	C
Bromine - dry	A	A	C	B	B
Bromine - moist	B	B	C	C	C
Butadiene	A	A	A	A	A
Butane	A	A	A	A	A
Butanol (butyl alcohol)	A	A	A^5	A	A
Butyl phenols	B	A	B^5	B	B
Butylamine	C^3	A	A	A	A
Butyric acid	B	B	C	B	B
Cadmium chloride - moist	B	B	C	$C^{3,4}$	C^3
Cadmium chloride - dry	B	A	A	A	A
Cadmium sulfate	B	A	B	A	A
Calcium bisulfite	B	B	B	B^1	B
Calcium bromide	B	B	C	C^3	C^3
Calcium chloride - moist	B	B	C	$C^{3,4}$	C^3
Calcium chloride - dry	B	A	A	A	A
Calcium fluoride	B	B	C	C	C
Calcium hydroxide	B	B	C	B	B

ENGINEERING DATA

CORROSION RESISTANCE TABLE

	BRONZE	MONEL	CARBON STEEL	STAINLESS 304L/321	STAINLESS 316L
Calcium hypochlorite - moist	C	B	C	C[3,4]	C[3,4]
Calcium hypochlorite - dry	B	A	B	A	A
Calcium nitrate	B	B	C[1]	B[1]	B
Calcium oxide	A	A	A	A	A
Cane sugar syrups	A	A	B	A	A
Carbolic acid (phenol)	B	B	C	B	A
Carbon dioxide - dry	A	A	A	A	A
Carbon dioxide - moist	C[4]	A	C	A	A
Carbonated beverages	B	A	C	A	A
Carbonated water	B[4]	A	C	A	A
Carbon disulfide	B	B	B	B	B
Carbon tetrachloride - dry	A	A	B	A	A
Carbon tetrachloride - moist	B	B	C	C[3,4]	C4
Castor oil	A	A	A	A	A
Chlorine - dry	A	A	B	A	A
Chlorine - moist	C	B	C	C[3,4]	C[3]
Chloroacetic acid	C	B	C	C[3,4]	C[3]
Chloric acid	C	C	C	C[3]	C[3]
Chlorine dioxide - dry	B	A	B	A	A
Chlorine dioxide - moist	C	B	C	C[3,4]	C[3]
Chloroform - dry	A	A	A	A	A
Chloroform - moist	B	B	C	C[3,4]	C[3]
Chromic acid	C	B	C[3]	C[1,4]	B
Chromic fluorides	C	B	C	C	C
Chromic hydroxide	B	B	B	B	B
Chromium sulfate	B	B	C	B	B
Cider	A	A	C	A	A
Citric acid	C	B	C	B	B
Coffee	A	A	C	A	A
Copper chloride - dry	A	A	B	A	A
Copper chloride - moist	B	B	C	C[3,4]	C[3]
Copper nitrate	C	C	C	A	A
Copper sulfate	C	B	C	B[1]	B
Corn oil	A	A	A	A	A
Cottonseed oil	A	A	A	A	A
Creosole	B	A	A	A	A
Crude oil	B	A	C	C[1]	B
Cyclohexane	B	B	B	B	B
DDT	B	B[4]	C	A	A
Dichloroethane - dry	A	A	A	A	A
Dichloroethane - moist	C	B	C	C[4]	C[4]
Dichloroethylene - dry	A	A	B	A	A
Dichloroethylene - moist	C	B	C	C[4]	C[4]
Dichlorophenol	B	B	C	B[3]	B[3]
Diisocyanate	B	A	B	A	A
Dimethyl sulfate	B	B	B	B	B
Epichlorohydrin - dry	B[4]	A	C[4]	A	A
Epichlorohydrin - moist	C[4]	B	C[4]	C[3,4]	C[3]
Ethane	A	A	A	A	A
Ethers	A	A	B	A	A
Ethyl acetate	A	B	B	B	B
Ethyl alcohol	A	A	A	A	A
Ethyl benzene	B[5]	B	B	B[3]	B
Ethyl chloride - dry	A	A	A	A	A
Ethyl chloride - moist	B	B	C	C[3,4]	C[3]
Ethylene	A	A	A	A	A
Ethylene chlorohydrin - dry	B	A	B	A	A
Ethylene chlorohydrin - moist	C	B	C	C[4]	C[4]
Ethylene diamine	C[1]	B	B	B	B
Ethylene glycol	A	A	A	A	A

	BRONZE	MONEL	CARBON STEEL	STAINLESS 304L/321	STAINLESS 316L
Ethylene oxide	C[2]	B	B	A	A
Fatty acids	C	B	C	B[1,4]	A
Ferric chloride - dry	B	A	B	A	A
Ferric chloride - moist	C	B	C	C[1,3,4]	C[3,4]
Ferric nitrate	C	C	C	B	B
Ferric sulfate	C	C	C	B[1]	A
Ferrous chloride - dry	B	A	B	A	A
Ferrous chloride - moist	C	B	C	C[3,4]	C[3]
Ferrous sulfate	B	A	C	B[4]	B
Fluorine - dry	B	A	A	A	A
Fluorine - moist	C	B	C	C	C
Formaldehyde	A[5]	A[5]	B[5]	B	B
Formic acid	B	B	C	B[1]	A
Freon	A	A	A	A	A
Fruitjuices	C	A	C	A	A
Fuel oil	B	A	C	A	A
Furfural	A	A	B	A	A
Gasoline	A	A	B	A	A
Gelatine	A	A	C	A	A
Glucose	A	A	B	A	A
Glue	B	A	C	A	A
Glutamic acid	C[4,5]	E[3]	C	B[3,4]	B[3,4]
Glycerin (glycerol)	A	A	B[5]	A	A
Heptane	A	A	A	A	A
Hexachloroethane - dry	B	A	B	A	A
Hexachloroethane - moist	C	B	C	C[4]	C[4]
Hydrazine	C[3]	C	C	A	A
Hydrobromic acid	C	C	C	C[4]	C
Hydrocarbons, pure	A	A	A	A	A
Hydrochloric acid	C	B	C	C[4]	C[4]
Hydrocyanic acid	C	B	C[3]	C[1,3]	C[3]
Hydrofluoric acid	C	B	C	C[1,3]	C
Hydrofluorsilicic acid	C	B	C	C	C
Hydrogen	A	A	A	A	A
Hydrogen chloride - dry	A	A	B	A	A
Hydrogen chloride - moist	C	B	C	C[4]	C[4]
Hydrogen peroxide	C	C	C	B	B
Hydrogen sulfide - dry	A[5]	A	B	A	A
Hydrogen sulfide - moist	C[4,5]	E[3]	C[3]	B[4]	A
Hydroquinone	B	B	B[5]	B	B
Kerosine (kerosene)	A	A	B	A	A
Lacquers	A	A	A	A	A
Lacquer solvents	A	A	A	A	A
Lactic acid	B	B	C	B[1,4]	B[1]
Lime	A	A	B	A	A
Lime - sulfur	C	B	C	B	B
Linseed oil	A	A	B	A	A
Lithium chloride - dry	B	A	B	A	A
Lithium chloride - moist	B	B	B	C[3,4]	C[3]
Lithium hydroxide	C	B	B	B	B
Magnesium chloride - dry	B	A	B	A	A
Magnesium chloride - moist	B	B	C	C[3,4]	C[3]
Magnesium hydroxide	A	A	A	A	A
Magnesium sulfate	A	A	B	B	A
Maleic acid	C	B	B	B[1]	B
Mercuric chloride - dry	B	A	B	A	A
Mercuric chloride - moist	C	B	C	C[3,4]	C[3]
Mercurous nitrate	C[3]	B[3]	B	B	B
Mercury	C	B[3]	B	B	B
Methyl alcohol	A	A	A	A	A

ENGINEERING DATA

CORROSION RESISTANCE TABLE

	BRONZE	MONEL	CARBON STEEL	STAINLESS 304L/321	STAINLESS 316L
Methane	A	A	A	A	A
Methyl chloride - dry	A	A	A	A	A
Methyl chloride - moist	B	B	C	C[3,4]	C[3]
Methyl ethyl ketone	B	B	B	B	B
Milk	B	A	C	A	A
Mine water	C	B	C	B	B
Napthalene	B	B	A	A	A
Natural gas	A	A	A	A	A
Nickel chloride - dry	B	A	B	A	A
Nickel chloride - moist	C	B	C	C[3,4]	C[3]
Nitric acid	C	C	C	A	A
Nitrotoluene	B	B	B	B	B
Nitrogen	A	A	A	A	A
Oleic acid	B[5]	A	C	B[4]	B
Oleum (fuming H2S04)	C	C	B[3]	B	B
Axalic acid	B	B	C	C[1]	B[1]
Oxygen	A	A	C	A	A
Palmitic acid	B	A	C	A	A
Parafin	A	A	B	A	A
Pentane	B	B	B	B	B
Phenol (carbolic acid)	B	B	C	B	A
Phosphoric acid	C	B	C	C[1]	B[1]
Phthalic acid	B	B	C	B[1]	B
Pitric acid	C	C	C	B	B
Potassium bromide	B	B	C	C	C
Potassium carbonate	B	A	B	A	A
Potassium chloride - dry	A	A	A	A	A
Potassium chloride - moist	B[3]	B	C	C[3,4]	C[3]
Potassium chromate	B	B	C	B	B
Potassium cyanide	C[4]	A	B	B	B
Potassium dichromate	C	A	C	A	A
Potassium fluoride	B	B	C	C	C
Potassium hydroxide	C[5]	A[3]	B[3]	B[3]	A
Potassium nitrate	B	B	B	B	A
Potassium permanganate	B	B	B	B	B
Potassium sulfate	B	B	C	B	B
Propane	A	A	A	A	A
Propylene	A	A	A	A	A
Propylene oxide	C	C	C	A	A
Propylene dichloride - dry	B	A	B	A	A
Propylene dichloride - moist	C	B	C	C[4]	C[4]
Pyridine	B[5]	B	B[5]	B	B
Pyrrolidine	C[3]	B	B	B	A
Quinine	B	B	C	B	B
Rosin	A[5]	A	C[5]	A	A
Sea water	B	B	C	C[3,4]	C[3]
Sewage	A	A	B	A	A
Silver salts	C	A	C	B	B
Silver nitrate	C	C	C[3]	B	A
Soap solutions	A	A	B	A	A
Sodium	C	A	A	A	A
Sodium acetate	B	B	B	B[4]	B
Sodium bicarbonate	B	A	C	A	A
Sodium bisulfate	B	B	C	B[1,4]	A
Sodium bisulfite	C[4]	B[4]	C	B	B
Sodium bromide	B	B	B	C	C
Sodium carbonate	B	A	B	A	A
Sodium chlorate - dry	B	A	A	A	A
Sodium chlorate - moist	B	B	C	C[3,4]	C[3]
Sodium chloride - dry	B	A	B	A	A

	BRONZE	MONEL	CARBON STEEL	STAINLESS 304L/321	STAINLESS 316L
Sodium chloride - moist	B	B	C	C[3,4]	C[3]
Sodium chromate	A	A	B	A	A
Sodium citrate	C	B	B	B	B
Sodium cyanide	C[4]	B	B	B	B
Sodium dichromate	C	B	C	A	A
Sodium fluoride	B	A	B	C[4]	C
Sodium hydroxide 6	B[4]	A	B[3]	B[3]	B[3]
Sodium hypochlorite - dry	B	A	B	A	A
Sodium hypochlorite - moist	C	B	C	C[1,4]	C[4]
Sodium metasilicate	B	A	B	A	A
Sodium nitrate	B	A	B[3]	A	A
Sodium nitrite	B	B	B	B	B
Sodium peroxide	C	B	C	A	A
Sodium phosphate	B	A	C	A	A
Sodium silicate	A	A	B	A	A
Sodium sulfate	A	A	B	B[3]	B
Soldium sulfide	C	A	C	B[4]	B
Sodium sulfite	B	A	C	B	B
Sodium thiosulfate	C	A	C	B	B
Stannic chloride - dry	B	A	B	A	A
Stannic chloride - moist	C	B	C	C[3,4]	C[3]
Stannous chloride - dry	B	A	B	A	A
Stannous chloride - moist	C	B	C	C[3,4]	C[3]
Steam	A	A[3]	C	A	A
Stearic acid	B	B	C[5]	B	B
Strontium nitrate	B	B	C	B	B
Sulfate black liquor	C	B	B	B	B
Sulfate green liquor	C	B	B	B[3]	B
Sugar solutions	A	A	B	A	A
Sulfur - dry	C	A	B	A	A
Sulfur - molten	C	C	C	C	B
Sulfur chloride - dry	B	A	C	A	A
Sulfur chloride - moist	C	B	C	C[3,4]	C[3]
Sulfur dioxide - dry	B	B	C	C[1]	B
Sulfur dioxide - moist	C[4]	C	C	C[1]	B
Sulfur trioxide - dry	A	A	C	A	A
Sulfuric acid, 95-100%	B	B	B	A	A
Sulfuric acid, 80- 95%	B	B	C	B	B
Sulfuric acid, 40- 80%	C	C	C	C[1]	C[1]
Sulfuric acid, 40%	C	C	C	C[1]	C[1]
Sulfurous acid	B	B	C	C[1,4]	C[1,4]
Tail oil	C	B	B	B	B
Tannic acid	B	B	C[5]	B	B
Tar	A	A	B	A	A
Tartaric acid	C	B	C	B	B
Tetraphosphoric acid	C	C	C	B	B
Toluene	A	A	A	A	A
Trichloroacetic acid	C	B	C	C[3,4]	C[4]
Trichloroethane - dry	A	A	A	A	A
Trichloroethane - moist	C	B	C	C[4]	C[4]
Trichloroethylene - dry	A	A	A	A	A
Trichloroethylene - moist	C	B	C	C[4]	C[4]
Turpentine	A	A	B	A	A
Varnish	A	A	B	A	A
Vinegar	B	B	C	A	A
Water, potable	A	A	C	A	A
Xylene	B	A	B	A	A
Zinc chloride - dry	B	A	A	A	A
Zinc chloride - moist	C[4]	B	C	C[3,4]	C[3]
Zinc sulfate	B	B	C	B	A

STAINLESS STEEL CORRUGATED HOSE

STANDARD UP TO MEDIUM PRESSURE

BW656

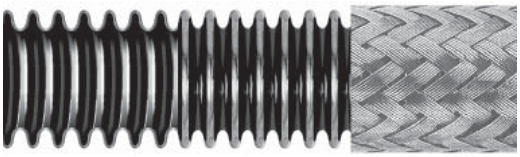

USES

ANACONDA butt welded corrugated stainless steel hose type BW656 is designed for conveying chemicals, gases, steam, etc. It is suitable for use under full vacuum and has a temperature range of cryogenic to ca. +600°C*. Type BW656 is designed for general purpose service and will meet most pressure requirements. It has a good flexibility and a good flexure life, suitable for normal industrial vibrations.

BURST PRESSURE

The burst pressure of hose with braid is at least 4 times the working pressure.

MATERIALS

The core is manufactured from stainless steel AISI 316L (1.4404) with a standard stainless steel AISI 304 (1.4301) wire braid covering. Other alloys are available; consult your ANAMET representative.

TYPES

BW656-0 corrugated stainless steel hose, unbraided
BW656-1S corrugated stainless steel hose, single braided
BW656-2S corrugated stainless steel hose, double braided

nominal I.D. mm	nominal I.D. inch	designation	max. O.D. (mm)	min. c/l bend radius for ** flexing bend (mm)	min. c/l bend radius for ** permanent bend (mm)	min. exposed lenght for normal vibration (mm)	rated pressure data at 20°C*** max. working pressure (bar)	rated pressure data at 20°C*** max. test pressure (bar)	approx. weight (kg/m)
6	1/4	BW656-0	10,0	100	25	115	18	18	0,09
		BW656-1S	11,1				172	258	0,17
8	5/16	BW656-0	12,3	100	25	125	18	18	0,10
		BW656-1S	13,4				126	189	0,19
10	3/8	BW656-0	14,4	150	30	125	15	15	0,12
		BW656-1S	15,7				105	158	0,23
12	1/2	BW656-0	16,9	180	35	140	12	12	0,15
		BW656-1S	18,3				95	143	0,30
15	1/2	BW656-0	20,2	180	35	140	10	10	0,18
		BW656-1S	21,7				85	128	0,36
20	3/4	BW656-0	27,0	190	40	150	7	7	0,28
		BW656-1S	28,6				70	105	0,59
25	1	BW656-0	32,6	215	70	180	6	6	0,39
		BW656-1S	34,6				64	96	0,84
32	1 1/4	BW656-0	41,4	230	90	205	4	4	0,50
		BW656-1S	44,2				55	83	0,97
40	1 1/2	BW656-0	50,0	255	125	215	2	2	0,75
		BW656-1S	52,8				34	51	1,29
		BW656-2S	55,6				55	83	1,83
50	2	BW656-0	60,8	280	190	240	1	1	0,86
		BW656-1S	63,6				28	42	1,55
		BW656-2S	66,4				35	53	2,24
65	2 1/2	BW656-0	85,0	510	205	255	0,7	0,7	1,73
		BW656-1S	89,3				19	29	2,75
		BW656-2S	93,4				34	51	4,48
75	3	BW656-0	99,0	560	230	280	0,7	0,7	1,80
		BW656-1S	103,3				25	38	3,33
		BW656-2S	107,6				32	48	4,86
100	4	BW656-0	125,0	690	330	305	0,5	0,5	2,51
		BW656-1S	129,3				20	30	4,79
		BW656-2S	133,6				25	38	7,07
125	5	BW656-0	154,5	790	460	330	0,4	0,4	3,25
		BW656-1S	158,0				15	23	5,75
		BW656-2S	161,5				20	30	8,25
150	6	BW656-0	179,5	915	485	370	0,3	0,3	4,00
		BW656-1S	183,0				12	18	6,90
		BW656-2S	186,5				16	24	9,80
200	8	BW656-0	233,5	1170	560	420	0,2	0,2	7,00
		BW656-1S	237,5				10	15	11,20
		BW656-2S	241,5				16	24	15,40

* For working temperatures above 400°C environmental conditions are to be considered - consult your Anamet representative.
** It is recommendable to increase the minimum bend radius with 25% when high pressures or temperatures are involved.
*** For temperatures higher than room temperature use the applicable temperature correction factor.

STAINLESS STEEL CORRUGATED HOSE

HIGH PRESSURE

BW856

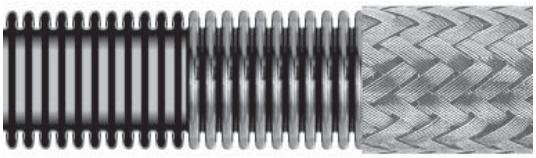

Uses

ANACONDA butt welded corrugated stainless steel hose type BW856 is designed for conveying chemicals, gases, steam, etc. It is suitable for use under full vacuum and has a temperature range of cryogenic to ca. +600°C*. Type BW856 engineered design and construction allows it to operate at higher pressures than the standard and medium series. Its durable construction makes it suitable for severe applications, vibrations and high pressures.

Burst pressure

The burst pressure of hose with braid is at least 4 times the working pressure.

Materials

The core is manufactured from AISI 316 L (1.4404) stainless steel with a heavy stainless steel AISI 304 (1.4301) wire braid covering. Other alloys are available; consult your ANAMET representative.

Types

BW 856-0	corrugated stainless steel hose, unbraided
BW 856-1H	corrugated stainless steel hose, with one heavy braid
BW 856-2H	corrugated stainless steel hose, with two heavy braids

nominal I.D. mm	nominal I.D. inch	designation	max. O.D. (mm)	min. c/l bend radius for ** flexing bend (mm)	min. c/l bend radius for ** permanent bend (mm)	min. exposed lenght for normal vibration (mm)	rated pressure data at 20°C*** max. working pressure (bar)	rated pressure data at 20°C*** max. test pressure (bar)	rated pressure data at 20°C*** approx. weight (kg/m)
12	1/2	BW856-0	22,1	205	40	140	6	6	0,58
		BW856-1H	24,9				132	198	0,95
		BW856-2H	27,7				225	338	1,32
20	3/4	BW856-0	32,0	205	55	150	5	5	0,71
		BW856-1H	34,8				90	135	1,26
		BW856-2H	37,6				155	233	1,81
25	1	BW856-0	39,3	230	80	180	3	3	1,18
		BW856-1H	42,1				85	128	1,87
		BW856-2H	44,9				140	210	2,56
32	1 1/4	BW856-0	48,2	255	85	205	2	2	1,52
		BW856-1H	51,0				64	96	2,32
		BW856-2H	53,8				112	168	3,12
40	1 1/2	BW856-0	56,4	255	85	215	1	1	2,02
		BW856-1H	60,7				60	90	3,10
		BW856-2H	65,0				108	162	4,18
50	2	BW856-0	64,2	295	140	240	1	1	2,38
		BW856-1H	68,5				55	83	3,85
		BW856-2H	72,8				74	111	5,32
65	2 1/2	BW856-0	83,5	610	180	255	0,7	0,7	2,98
		BW856-1H	87,8				38	57	4,64
		BW856-2H	92,1				64	96	6,30
75	3	BW856-0	96,2	715	195	280	0,7	0,7	5,22
		BW856-1H	100,5				34	51	7,21
		BW856-2H	104,8				55	83	9,20
100	4	BW856-0	123,7	1020	510	305	0,5	0,5	4,42
		BW856-1H	128,0				23	35	6,86
		BW856-2H	132,3				35	53	9,30
150	6	BW856-0	176,8	2415	610	370	0,3	0,3	5,61
		BW856-1H	182,1				12	18	8,88
		BW856-2H	187,7				21	32	12,15

* For working temperatures above 400°C environmental conditions are to be considered - consult your Anamet representative.
** It is recommendable to increase the minimum bend radius with 25% when high pressures or temperatures are involved.
*** For temperatures higher than room temperature use the applicable temperature correction factor.

STAINLESS STEEL CORRUGATED HOSE

EXTRA HIGH PRESSURE

BW956

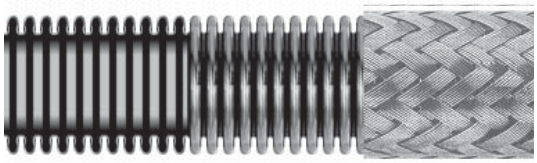

Uses

ANACONDA butt welded corrugated stainless steel hose type BW 956 is designed for conveying chemicals, gases, steam, etc. It is suitable for use under full vacuum and has a temperature range of cryogenic to ca. +600°C*. The engineered design and construction allows it to operate at higher pressures than the BW856 type. Its extra durable construction makes it suitable for severe applications, vibrations and extreme high pressures.

Burst pressure

The burst pressure of hose with braid is at least 4 times the working pressure.

Materials

The core is manufactured from AISI 316L (1.4404) stainless steel with an extra heavy stainless steel AISI 304 (1.4301) wire braid covering. Other alloys are available; consult your ANAMET representative.

Types

BW 956-0 corrugated stainless steel hose, unbraided
BW 956-2E corrugated stainless steel hose, with 2 extra heavy braids
BW 956-3E corrugated stainless steel hose, with 3 extra heavy braids

nominal I.D. mm	nominal I.D. inch	designation	max. O.D. (mm)	min. c/l bend radius for ** flexing bend (mm)	min. c/l bend radius for ** permanent bend (mm)	min. exposed lenght for normal vibration (mm)	rated pressure data at 20°C*** max. working pressure (bar)	rated pressure data at 20°C*** max. test pressure (bar)	approx. weight (kg/m)
6	1/4	BW956-0	13,4	305	155	115	12	12	0,30
		BW956-2E	18,2				310	465	0,70
10	3/8	BW956-0	17,8	305	155	125	7	7	0,46
		BW956-2E	23,4				270	405	1,07
12	1/2	BW956-0	22,1	330	180	140	6	6	0,73
		BW956-2E	27,7				255	383	1,52
20	3/4	BW956-0	32,0	380	190	150	5	5	1,35
		BW956-2E	37,6				185	278	2,42
25	1	BW956-0	39,3	410	205	180	3	3	1,66
		BW956-2E	44,9				158	237	3,06
32	1 1/4	BW956-0	48,2	460	220	205	2	2	2,58
		BW956-2E	54,3				132	198	4,53
40	1 1/2	BW956-0	56,4	485	245	215	1	1	3,84
		BW956-2E	65,0				120	180	6,43
50	2	BW956-0	64,2	610	305	240	1	1	4,98
		BW956-2E	72,8				92	138	8,02
65	2 1/2	BW956-0	83,5	690	340	255	0,7	0,7	5,07
		BW956-2E	92,1				70	105	8,76
75	3	BW956-0	96,2	815	435	280	0,7	0,7	6,53
		BW956-3E	109,2				65	98	13,08
100	4	BW956-0	123,7	1220	560	305	0,5	0,5	7,07
		BW956-3E	138,6				45	68	15,00

* For working temperatures above 400°C environmental conditions are to be considered- consult your Anamet representative.
** It is recommendable to increase the minimum bend radius with 25% when high pressures or temperatures are involved.
*** For temperatures higher than room temperature use the applicable temperature correction factor.

MONEL CORRUGATED HOSE

EXTREME CORROSION RESISTANCE

BW673

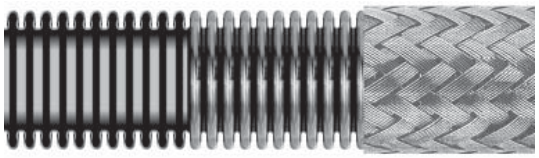

Uses

ANACONDA type BW673 is extremely resistant to corrosion, and is used to convey corrosive liquids and gases for applications that involve high pressure, temperatures to +540 °C*, vibration and flexure. Type BW673 is designed for Chlorine applications. Applicable as transfer hose for tankcar, cargotank, tankbarge, etc.

Burst pressure

The burst pressure of hose with braid is at least 4 times the working pressure.

Materials

The hose and braid are manufactured from Monel 400. For other alloys please consult your ANAMET representative.

Types

BW 673-0 corrugated Monel hose, unbraided
BW 673-1S corrugated Monel hose, single Monel braided
BW 673-2S corrugated Monel hose, double Monel braided

nominal I.D. mm	nominal I.D. inch	designation	max. O.D. (mm)	min. c/l bend radius for ** flexing bend (mm)	min. c/l bend radius for ** permanent bend (mm)	min. exposed lenght for normal vibration (mm)	rated pressure data at 20°C*** max. working pressure (bar)	rated pressure data at 20°C*** max. test pressure (bar)	approx. weight (kg/m)
6	1/4	BW673-0	11,9	155	50	115	9,0	13,4	0,19
		BW673-1S	13,4				117	176	0,31
		BW673-2S	14,7				167	250	0,43
10	3/8	BW673-0	15,7	155	50	125	6,2	9,3	0,23
		BW673-1S	17,2				88	132	0,40
		BW673-2S	18,7				135	202	0,60
12	1/2	BW673-0	19,4	180	65	140	4,5	6,8	0,28
		BW673-1S	20,8				59	88	0,46
		BW673-2S	22,3				93	139	0,64
20	3/4	BW673-0	27,0	205	65	150	3,4	5,2	0,41
		BW673-1S	28,2				49	73	0,64
		BW673-2S	29,7				80	120	0,89
25	1	BW673-0	34,5	230	75	180	2,4	3,6	0,74
		BW673-1S	36,3				48	72	1,15
		BW673-2S	38,4				78	117	1,61
32	1 1/4	BW673-0	44,6	255	105	205	1,4	2,1	0,95
		BW673-1S	47,5				42	63	1,46
		BW673-2S	49,5				68	102	2,02
40	1 1/2	BW673-0	53,3	255	105	215	1	1,5	1,16
		BW673-1S	55,2				29	43	1,76
		BW673-2S	57,3				53	79	2,41
50	2	BW673-0	64,9	280	155	240	0,7	1,0	1,44
		BW673-1S	67,2				22	32	2,16
		BW673-2S	69,7				42	64	2,96
75	3	BW673-0	98,3	510	255	280	0,5	0,7	2,63
		BW673-1S	102,4				21	31	3,97
		BW673-2S	105,4				34	52	5,46
100	4	BW673-0	122,0	610	305	305	0,3	0,4	3,10
		BW673-1S	127,3				18	27	5,27
		BW673-2S	132,3				30	45	7,69

* For working temperatures above 400°C environmental conditions are to be considered- consult your Anamet representative.
** It is recommendable to increase the minimum bend radius with 25% when high pressures or temperatures are involved.
*** For temperatures higher than room temperature use the applicable temperature correction factor.

CORRUGATED BRONZE HOSE

MEDIUM PRESSURE

BW794

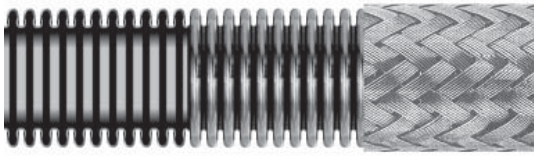

Uses

ANACONDA type BW 794 is a general all-purpose hose for conveying liquids and gases. It is pressure tight, will withstand temperatures to 200°C, and is used for applications involving vibration or flexure. An increasing use is made of flexible bronze hoses for the simple and easy connection of components in HVAC (Heating, Ventilation and Air-Conditioning) systems.

Burst pressure

The burst pressure of hose with braid is at least 4 times the working pressure.

Materials

Made with annular corrugations from tin bronze tubing . Usually covered with a bronze wire braid, however stainless steel braiding is also possible.

Types

BW 794-0	corrugated bronze hose, unbraided
BW 794 -1BB	corrugated bronze hose, single bronze braided
BW 794 -2BB	corrugated bronze hose, double bronze braided

nominal I.D. mm	nominal I.D. inch	designation	max. O.D. (mm)	min. c/l bend radius for ** flexing bend (mm)	min. c/l bend radius for ** permanent bend (mm)	min. exposed lenght for normal vibration (mm)	rated pressure data at 20°C*** max. working pressure (bar)	rated pressure data at 20°C*** max. test pressure (bar)	approx. weight (kg/m)
		BW 794 -0	13,2			-	15	15	0,19
6	1/4	BW 794 -1BB	15,2	140	25	115	78	117	0,34
		BW 794 -2BB	17,3			115	108	162	0,49
		BW 794 -0	17,8			-	9	9	0,37
10	3/8	BW 794 -1BB	19,8	155	35	125	49	74	0,54
		BW 794 -2BB	21,8			125	68	102	0,70
		BW 794 -0	22,1			-	7	7	0,57
12	1/2	BW 794 -1BB	24,1	180	40	140	47	71	0,85
		BW 794 -2BB	26,2			140	65	98	1,13
		BW 794 -0	32,0			-	6	6	0,74
20	3/4	BW 794 -1BB	34,5	205	60	150	39	59	1,24
		BW 794 -2BB	37,1			150	55	83	1,73
		BW 794 -0	39,6			-	4	4	1,01
25	1	BW 794 -1BB	42,2	255	80	180	32	48	1,67
		BW 794 -2BB	44,7			180	44	66	2,32
		BW 794 -0	48,3			-	3	3	1,19
32	1 1/4	BW 794 -1BB	50,8	305	90	205	24	36	1,95
		BW 794 -2BB	53,3			205	34	51	2,71
		BW 794 -0	56,6			-	2	2	1,53
40	1 1/2	BW 794 -1BB	59,9	345	105	215	23	35	2,57
		BW 794 -2BB	63,0			215	32	48	3,62
		BW 794 -0	64,8			-	1	1	2,69
50	2	BW 794 -1BB	68,1	435	130	240	19	29	4,06
		BW 794 -2BB	71,1			240	26	39	5,43
		BW 794 -0	83,6			-	1	1	2,07
65	2 1/2	BW 794 -1BB	86,6	560	205	255	18	27	3,96
		BW 794 -2BB	89,7			255	25	38	5,85
		BW 794 -0	97,5			-	1	1	2,14
75	3	BW 794 -1BB	100,6	610	305	280	14	21	4,22
		BW 794 -2BB	103,9			280	19	29	6,12

* It is recommendable to increase the minimum bend radius with 25% when high pressures or temperatures are involved.

** For hose with braid the working pressure is 25% of the burst pressure. For temperatures higher than room temperature use the applicable temperature correction factor.

STANDARD END-CONNECTIONS

FOR STAINLESS STEEL AND MONEL CORRUGATED HOSE

End-connections are TIG-welded to the corrugated stainless steel hoses. Steel fittings are standard used on stainless steel hoses. Fittings can also be supplied in type AISI 304 stainless steel and other austenitic stainless steel alloys. Fittings with other types of thread also available.

Welding end 6 mm to 100 mm

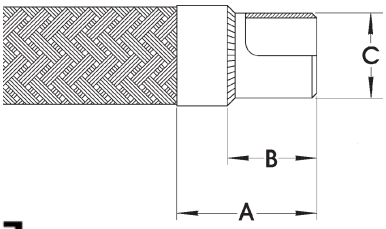

1

nominal I.D. dimensions in mm

mm	inch	A	B	*C ANSI	*C ISO
6	1/4	59	50	13,7 x 2,2	10,2 x 1,6 / 13,5 x 1,8
10	3/8	60	50	17,2 x 2,3	17,2 x 1,8
12	1/2	62	50	21,3 x 2,8	21,3 x 2,0
20	3/4	65	50	26,7 x 2,9	26,9 x 2,3
25	1	70	50	33,4 x 3,4	33,7 x 2,6
32	1.1/4	70	50	42,2 x 3,6	42,4 x 2,6
40	1.1/2	85	60	48,3 x 3,7	48,3 x 2,6
50	2	90	60	60,3 x 3,9	60,3 x 2,9
65	2.1/2	90	60	73,0 x 5,2	76,1 x 2,9
75	3	95	65	88,9 x 5,5	88,9 x 3,2
100	4	105	75	114,3 x 6,0	114,3 x 3,6

Welding end 125 mm to 200 mm

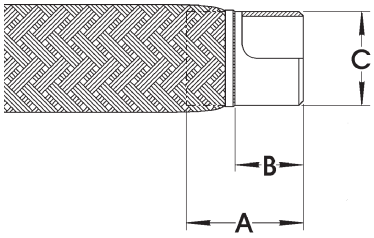

mm	inch	A	B	*C ANSI	*C ISO
125	5	125	75	141,3 x 6,5	139,7 x 4,0
150	6	125	75	168,3 x 7,1	168,3 x 4,5
200	8	135	75	219,1 x 8,2	219,1 x 5,9

* If fittings with other dimension “C” are required please specify when ordering.

Pipe nipple tapered male.

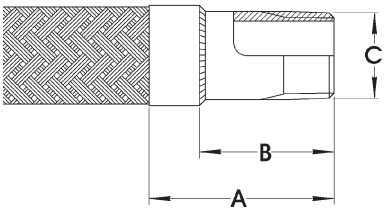

2

mm	inch	A	B	C	A	B	C
6	1/4	38	29	1/4” BSPT	45	36	1/4” NPT
10	3/8	39	29	3/8” BSPT	46	36	3/8” NPT
13	1/2	52	40	1/2” BSPT	54	42	1/2” NPT
20	3/4	55	40	3/4” BSPT	61	46	3/4” NPT
25	1	70	50	1” BSPT	73	53	1” NPT
32	1.1/4	75	55	1.1/4” BSPT	75	55	1.1/4” NPT
40	1.1/2	85	60	1.1/2” BSPT	84	59	1.1/2” NPT
50	2	95	65	2” BSPT	87	57	2” NPT
65	2.1/2	105	75	2.1/2” BSPT	120	90	2.1/2” NPT
75	3	105	75	3” BSPT	120	90	3” NPT
100	4	125	95	4” BSPT	125	95	4” NPT

STANDARD END-CONNECTIONS

FOR STAINLESS STEEL AND MONEL CORRUGATED HOSE

End-connections are TIG-welded to the corrugated stainless steel hoses. Steel fittings are standard used on stainless steel hoses. Fittings can also be supplied in type AISI 304 stainless steel and other austenitic stainless steel alloys. Fittings with other types of thread also available.

nominal I.D. dimensions in mm

Hexagon nipple tapered male.

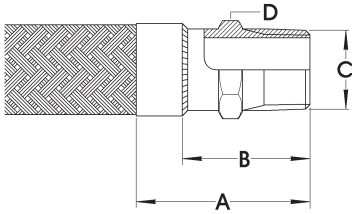

3

mm	inch	A	B	C	A	B	C	D
6	1/4	33	24	1/4" BSPT	39	27	1/4" NPT	14
10	3/8	38	28	3/8" BSPT	43	33	3/8" NPT	19
12	1/2	46	34	1/2" BSPT	50	38	1/2" NPT	22
20	3/4	55	40	3/4" BSPT	59	44	3/4" NPT	27
25	1	66	46	1" BSPT	69	49	1" NPT	36
32	1 1/4	72	52	11/4" BSPT	75	55	11/4" NPT	42
40	1 1/2	79	54	11/2" BSPT	81	56	11/2" NPT	50
50	2	92	62	2" BSPT	89	59	2" NPT	65
65	2 1/2	103	73	21/2" BSPT	106	76	21/2" NPT	85
75	3	120	90	3" BSPT				105
100	4	130	100	4" BSPT				135

Hexagon nipple straight male with inside 60° cone and sealing face on hexagon.

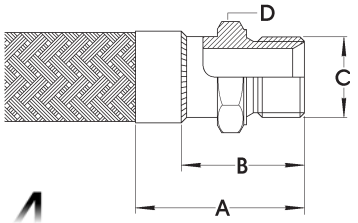

4

mm	inch	A	B	C	D
6	1/4	33	24	1/4" BSP	17
10	3/8	39	29	3/8" BSP	22
12	1/2	44	32	1/2" BSP	27
20	3/4	55	40	3/4" BSP	32
25	1	65	45	1" BSP	41
32	1 1/4	65	45	11/4" BSP	50
40	1 1/2	72	47	11/2" BSP	55
50	2	81	51	2" BSP	70
65	2 1/2	95	65	21/2" BSP	85
75	3	110	80	3" BSP	100
100	4	120	90	4" BSP	135

Plain socket straight female.

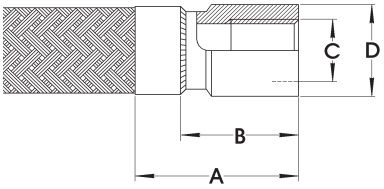

5

mm	inch	A	B	C	D
6	1/4	36	27	1/4" BSP	17
10	3/8	40	35	3/8" BSP	22
12	1/2	52	40	1/2" BSP	27
20	3/4	55	40	3/4" BSP	33
25	1	70	50	1" BSP	40
32	1 1/4	75	55	11/4" BSP	50
40	1 1/2	85	60	11/2" BSP	58
50	2	95	65	2" BSP	70
65	2 1/2	104	74	21/2" BSP	85
75	3	110	80	3" BSP	100
100	4	124	94	4" BSP	125

STANDARD END-CONNECTIONS

FOR STAINLESS STEEL AND MONEL CORRUGATED HOSE

End-connections are TIG-welded to the corrugated stainless steel hoses. Steel fittings are standard used on stainless steel hoses. Fittings can also be supplied in type AISI 304 stainless steel and other austenitic stainless steel alloys. Fittings with other types of thread also available.

nominal I.D. dimensions in mm

Galvanized steel female swivel with stainless steel spherical cone nipple for 60° seat.

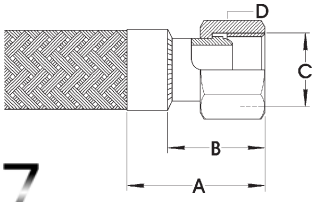

7

mm	inch	A	B	C	D
6	1/4	37	28	1/4” BSP	19
10	3/8	38	28	3/8” BSP	22
12	1/2	40	28	1/2” BSP	27
20	3/4	45	30	3/4” BSP	32
25	1	54	34	1” BSP	41
32	11/4	54	34	11/4” BSP	50
40	11/2	59	34	11/2” BSP	60
50	2	68	38	2” BSP	70
65	21/2	84	54	21/2” BSP	80
75	3	100	70	3” BSP	100

Hexagon union, same as fig. 7 completed with galvanized steel straight female nipple.

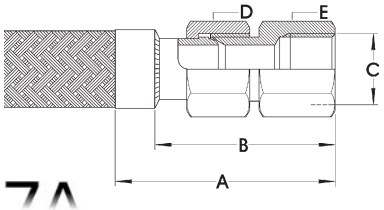

7A

mm	inch	A	B	C	D	E
6	1/4	64	55	1/4” BSP	19	17
10	3/8	66	56	3/8” BSP	22	22
12	1/2	71	59	1/2” BSP	27	27
20	3/4	80	65	3/4” BSP	32	32
25	1	93	73	1” BSP	41	41
32	11/4	95	75	11/4” BSP	50	50
40	11/2	102	77	11/2” BSP	60	55
50	2	113	83	2” BSP	70	70
65	21/2	133	103	21/2” BSP	85	85

Hexagon union, same as fig. 7 completed with galvanized steel straight male nipple.

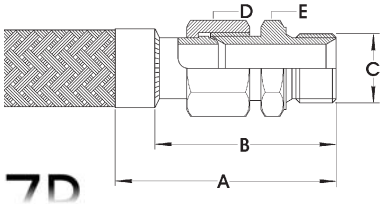

7B

mm	inch	A	B	C	D	E
6	1/4	59	50	1/4” BSP	19	17
10	3/8	64	54	3/8” BSP	22	22
12	1/2	72	60	1/2” BSP	27	27
20	3/4	85	70	3/4” BSP	32	32
25	1	97	77	1” BSP	38	38
32	11/4	90	70	11/4” BSP	50	50
40	11/2	97	72	11/2” BSP	60	55
50	2	110	80	2” BSP	70	70
65	21/2	135	105	21/2” BSP	80	85
75	3	162	132	3” BSP	100	100

Hexagon union, same as fig. 7 completed with steel welding end nipple.

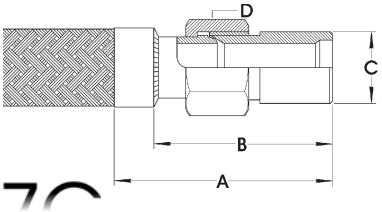

7C

mm	inch	A	B	C-ISO	C-ANSI	D
6	1/4	62	53	10,2 x 1,6		19
6	1/4	62	53	13,5 x 1,8	13,7 x 2,2	19
10	3/8	63	53	17,2 x 1,8	17,2 x 2,3	22
12	1/2	70	58	21,3 x 2,0	21,3 x 2,8	27
20	3/4	78	63	26,9 x 2,3	26,7 x 2,9	32
25	1	90	70	33,7 x 2,6	33,4 x 3,4	41
32	11/4	94	74	42,4 x 2,6	42,2 x 3,6	50
40	11/2	99	74	48,3 x 2,6	48,3 x 3,7	60
50	2	112	82	60,3 x 2,9	60,3 x 3,9	70
65	2 1/2	137	107	76,1 x 2,9	73,0 x 5,2	80

STANDARD END-CONNECTIONS

FOR STAINLESS STEEL AND MONEL CORRUGATED HOSE

End-connections are TIG-welded to the corrugated stainless steel hoses. Fittings are standard as specified under illustrations. Fittings with other types of thread also available.

nominal I.D. dimensions in mm

Hexagon union, same as fig. 7 completed with steel hexagon nipple

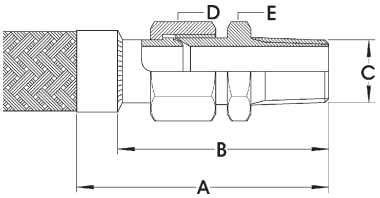

7D

mm	inch	A	B	C	D	E
6	1/4	67	58	1/4" BSPT	19	18
10	3/8	72	62	3/8" BSPT	22	23
12	1/2	83	71	1/2" BSPT	27	26
20	3/4	90	75	3/4" BSPT	32	33
25	1	109	89	1" BSPT	41	42
32	1 1/4	115	95	11/4" BSPT	50	52
40	1 1/2	117	97	11/2" BSPT	60	56
50	2	149	119	2" BSPT	70	70

Type 10A steel hexagon union straight female with conical sealing face.

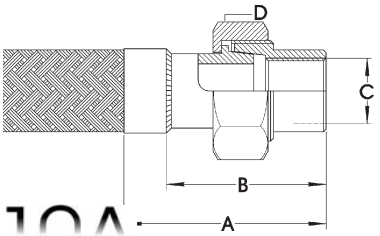

10A

mm	inch	A	B	C	D
6	1/4	49	40	1/4" BSP	27
10	3/8	56	46	3/8" BSP	32
12	1/2	66	54	1/2" BSP	41
20	3/4	75	60	3/4" BSP	50
25	1	86	66	1" BSP	55
32	11/4	92	72	11/4" BSP	70
40	11/2	106	81	11/2" BSP	75
50	2	121	91	2" BSP	90
65	21/2	132	102	21/2" BSP	110
75	3	137	107	3" BSP	130
100	4	149	118	4" BSP	155

Type 3000 malleable steel hexagon union tapered female with spherical cone sealing face.

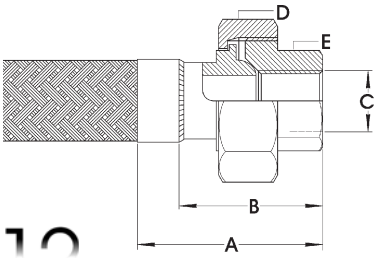

12

mm	inch	A	B	C	D	E
6	1/4	51	42	1/4" NPT	35	20*
10	3/8	57	47	3/8" NPT	40	24*
12	1/2	62	50	1/2" NPT	46	29*
20	3/4	73	58	3/4" NPT	56	35
25	1	84	64	1" NPT	65	43
32	11/4	91	71	11/4" NPT	78	52
40	11/2	103	78	11/2" NPT	87	59
50	2	117	87	2" NPT	104	73
65	21/2	133	103	21/2" NPT	124	87
75	3	139	109	3" NPT	146	105

* with round outline diameter

STANDARD END-CONNECTIONS

FOR STAINLESS STEEL AND MONEL CORRUGATED HOSE FIXED FLANGES ACCORDING TO **EN 1092-1 (DIN*)**

End-connections are TIG-welded to the corrugated stainless steel hoses.
Flanges in steel, stainless steel or cold-resistant steel.

nominal I.D. dimensions in mm

Fixed flange type 11.
Nominal diameter 10 to 100 mm.

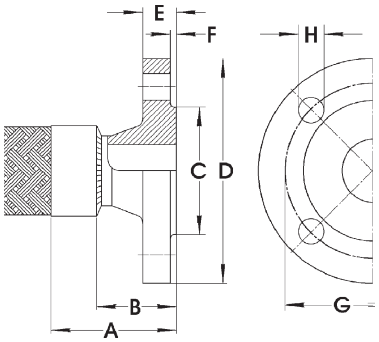

Fixed flange type 01.
Nominal diameter 125 to 250 mm.

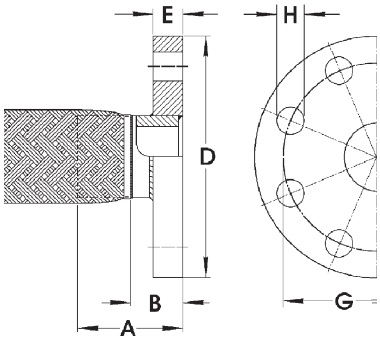

13

PN 06 (DIN2631*) mm	inch	A	B	C	D	E	F	G	H	Nr of Holes
10	3/8	38	28	35	75	12	2	50	11	4
15	1/2	42	30	40	80	12	2	55	11	4
20	3/4	47	32	50	90	14	2	65	11	4
25	1	55	35	60	100	14	2	75	11	4
32	11/4	55	35	70	120	14	2	90	14	4
40	11/2	63	38	80	130	14	3	100	14	4
50	2	68	38	90	140	14	3	110	14	4
65	21/2	68	38	110	160	14	3	130	14	4
80	3	72	42	128	190	16	3	150	18	4
100	4	75	45	148	210	16	3	170	18	4
125	5	105	54	-	240	20	-	200	18	8
150	6	105	54	-	265	20	-	225	18	8
200	8	120	57	-	320	22	-	280	18	8
250	10	120	57	-	375	24	-	335	18	12

PN 10 (DIN2632*) mm	inch	A	B	C	D	E		G	H	Nr of Holes
10 to 40			Use PN 40 dimensions							
50 to 150			Use PN 16 dimensions							
200	8	120	57		340	24		295	22	8
250	10	120	57		395	26		350	22	12

PN 16 (DIN2633*) mm	inch	A	B	C	D	E	F	G	H	Nr of Holes
10 to 40			Use PN 40 dimensions							
50	2	75	45	102	165	18	3	125	18	4
65	2 1/2	75	45	122	185	18	3	145	18	8*
80	3	80	50	138	200	20	3	160	18	8
100	4	82	52	158	220	20	3	180	18	8
125	5	105	54	-	250	22	-	210	18	8
150	6	105	54	-	285	24	-	240	22	8
200	8	120	57	-	340	26	-	295	22	12
250	10	120	57	-	405	29	-	355	26	12

PN 25 (DIN2634*) mm	inch	A	B	C	D	E		G	H	Nr of Holes
10 to 150			Use PN 40 dimensions							
200	8	120	57	-	360	32		310	26	12
250	10	120	57	-	425	35		370	30	12

PN 40 (DIN2635*) mm	inch	A	B	C	D	E	F	G	H	Nr of Holes
10	3/8	45	35	40	90	16	2	60	14	4
15	1/2	50	38	45	95	16	2	65	14	4
20	3/4	55	40	58	105	18	2	75	14	4
25	1	60	40	68	115	18	2	85	14	4
32	1 1/4	62	42	78	140	18	2	100	18	4
40	1 1/2	70	45	88	150	18	3	110	18	4
50	2	78	48	102	165	20	3	125	18	4
65	2 1/2	82	52	122	185	22	3	145	18	8
80	3	88	58	138	200	24	3	160	18	8
100	4	95	65	162	235	24	3	190	22	8

* The new European standard EN 1092-1 is based on the old DIN- standard. However there are a few small differences.

STANDARD END-CONNECTIONS

FOR STAINLESS STEEL AND MONEL CORRUGATED HOSE FLOATING FLANGES ACCORDING TO **EN 1092-1 (DIN*)**

End-connections are TIG-welded to the corrugated stainless steel hoses.
Collar type 32 (DIN form B) in steel or type AISI 304 stainless steel.
Flanges type 02 in steel, stainless steel or cold-resistant steel.

nominal I.D. dimensions in mm

Floating flange.
Nominal diameter 10 to 100 mm .

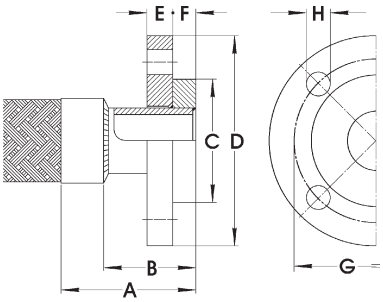

Floating flange.
Nominal diameter 125 to 250 mm .

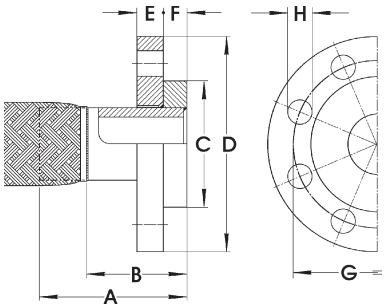

14

PN 06 (DIN2641*)

mm	inch	A	B	C	D	E	F	G	H	Nr. of Holes
10	3/8	62	52	35	75	12	10	50	11	4
15	1/2	64	52	40	80	12	10	55	11	4
20	3/4	67	52	50	90	14	10	65	11	4
25	1	72	52	60	100	14	10	75	11	4
32	1 1/4	72	52	70	120	16	10	90	14	4
40	1 1/2	87	62	80	130	16	10	100	14	4
50	2	92	62	90	140	16	12	110	14	4
65	2 1/2	92	62	110	160	16	12	130	14	4
80	3	98	68	128	190	18	12	150	18	4
100	4	108	78	148	210	18	14	170	18	4
125	5	170	119	178	240	20	14	200	18	8
150	6	170	119	202	265	20	14	225	18	8
200	8	195	131	258	320	22	16	280	18	8
250	10	200	136	312	375	24	18	335	18	12

PN 10 (DIN2642*)

mm	inch	A	B	C	D	E	F	G	H	Nr of Holes
10 to 40			Use PN 40 dimensions							
50 to 150			Use PN 16 dimensions							
200	8	203	139	268	340	24	20	295	22	8
250	10	207	143	320	395	26	22	350	22	12

PN 16

mm	inch	A	B	C	D	E	F	G	H	Nr of Holes
10 to 40			Use PN 40 dimensions							
50	2	92	62	102	165	20	16	125	18	4
65	2 1/2	92	62	122	185	20	16	145	18	8*
80	3	98	68	138	200	20	16	160	18	8
100	4	108	78	158	220	22	18	180	18	8
125	5	177	126	188	250	22	18	210	18	8
150	6	177	126	212	285	24	20	240	22	8
200	8	203	139	268	340	26	20	295	22	12
250	10	207	143	320	405	29	22	355	26	12

PN 25 (DIN2655*)

mm	inch	A	B	C	D	E	F	G	H	Nr of Holes
10 to 150			Use PN 40 dimensions							
200	8	213	149	278	360	32	26	310	26	12
250	10	219	155	335	425	35	26	370	30	12

PN 40 (DIN2656*)

mm	inch	A	B	C	D	E	F	G	H	Nr of Holes
10	3/8	62	52	40	90	14	12	60	14	4
15	1/2	64	52	45	95	14	12	65	14	4
20	3/4	67	52	58	105	16	14	75	14	4
25	1	72	52	68	115	16	14	85	14	4
32	1 1/4	72	52	78	140	18	14	100	18	4
40	1 1/2	87	62	88	150	18	14	110	18	4
50	2	92	62	102	165	20	16	125	18	4
65	2 1/2	92	62	122	185	22	16	145	18	8
80	3	98	68	138	200	24	18	160	18	8
100	4	108	78	162	235	26	20	190	22	8

* The new European standard EN 1092-1 is based on the old DIN- standard. However there are a few small differences.

STANDARD END-CONNECTIONS

FOR STAINLESS STEEL AND MONEL CORRUGATED HOSE FLOATING FLANGES ACCORDING TO **EN 1092-1 (DIN*)**

End-connections are TIG-welded to the corrugated stainless steel hoses.
Pressed collar type 37 in steel or type AISI 304 stainless steel.
Flanges type 02 in steel, stainless steel or cold-resistant steel.

nominal I.D. dimensions in mm

Floating flange.
Nominal diameter 10 to 100 mm.

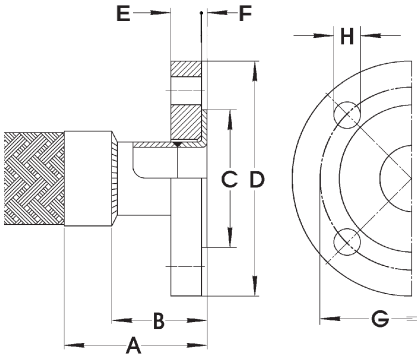

PN 10 (DIN2642 FORM G*)										Nr of
mm	inch	A	B	C	D	E	F	G	H	Holes
10	3/8	62	52	40	90	14	2,5	60	14	4
15	1/2	64	52	45	95	14	2,5	65	14	4
20	3/4	67	52	58	105	16	3	75	14	4
25	1	72	52	68	115	16	3	85	14	4
32	1 1/4	72	52	78	140	18	3	100	18	4
40	1 1/2	87	62	88	150	18	3	110	18	4
50	2	92	62	102	165	20	4	125	18	4
65	2 1/2	92	62	122	185	20	4	145	18	8
80	3	98	68	138	200	20	4	160	18	8
100	4	108	78	158	220	22	4	180	18	8
125	5	177	126	188	250	22	4	210	18	8
150	6	177	126	212	285	24	4	240	22	8
200	8	203	139	268	340	24	4	295	22	8

Note: Up to and including size 125 (5”), also allowed for PN 16.

Floating flange.
Nominal diameter 125 to 250 mm.

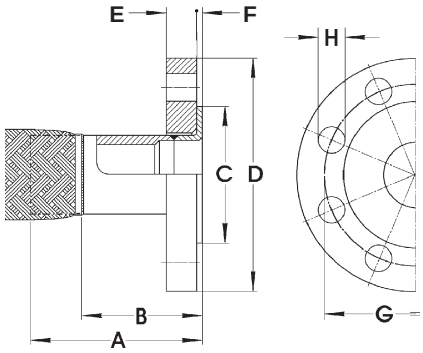

14

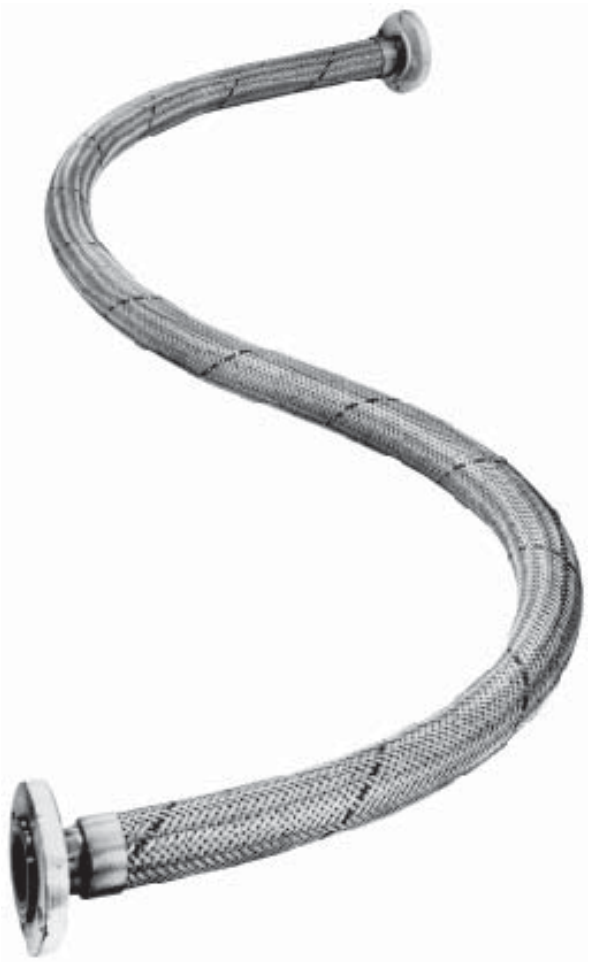

* The new European standard EN 1092-1 is based on the old DIN- standard. However there are a few small differences.

STANDARD END-CONNECTIONS

FOR STAINLESS STEEL AND MONEL CORRUGATED HOSE FIXED FLANGES ACCORDING TO **ANSI**

End-connections are TIG-welded to the corrugated stainless steel hoses. Flanges in steel, stainless steel or cold-resistant steel.

nominal I.D. dimensions in mm

Fixed flange.
Nominal diameter 10 to 100 mm

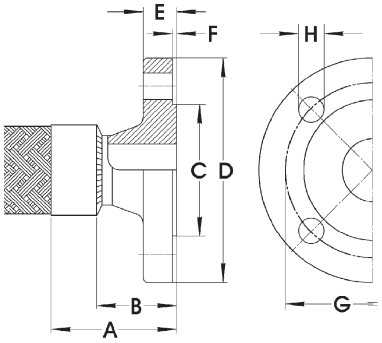

ANSI 150 lbs.										Nr of
mm	inch	A	B	C	D	E	F	G	H	Holes
12	1/2	60	48	35,0	89,0	11,2	1,6	60,5	16,0	4
20	3/4	67	52	43,0	98,5	12,7	1,6	70,0	16,0	4
25	1	76	56	51,0	108,0	14,2	1,6	79,5	16,0	4
32	1 1/4	77	57	63,5	117,5	15,7	1,6	89,0	16,0	4
40	1 1/2	87	62	73,0	127,0	17,5	1,6	98,5	16,0	4
50	2	94	64	92,0	152,5	19,1	1,6	120,5	19,0	4
65	2 1/2	100	70	105,0	178,0	22,4	1,6	139,5	19,0	4
75	3	100	70	127,0	190,5	23,9	1,6	152,5	19,0	4
100	4	106	76	157,0	228,5	23,9	1,6	190,5	19,0	8
125	5	127	77	185,5	254,0	23,9	1,6	216,0	22,0	8
150	6	130	80	216,0	279,5	25,4	1,6	241,5	22,0	8
200	8	150	90	270,0	343,0	28,4	1,6	298,5	22,0	8
250	10	156	96	324,0	406,5	30,2	1,6	362,0	25,5	12

Fixed flange.
Nominal diameter 125 to 250 mm

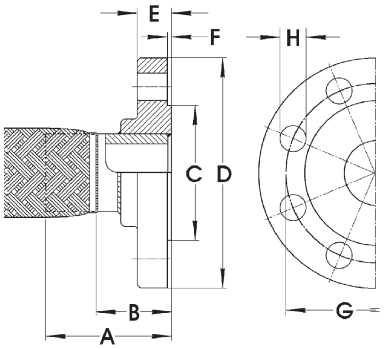

ANSI 300 lbs.										Nr of
mm	inch	A	B	C	D	E	F	G	H	Holes
12	1/2	64	52	35,0	95,0	14,2	1,6	66,5	16,0	4
20	3/4	72	57	43,0	117,5	15,7	1,6	82,5	19,0	4
25	1	82	62	51,0	124,0	17,5	1,6	89,0	19,0	4
32	1 1/4	85	65	63,5	133,5	19,0	1,6	98,5	19,0	4
40	1 1/2	93	68	73,0	155,5	20,6	1,6	114,5	22,0	4
50	2	100	70	92,0	165,0	22,3	1,6	127,0	19,0	8
65	2 1/2	106	76	105,0	190,5	25,4	1,6	149,0	22,0	8
75	3	109	79	127,0	209,5	28,4	1,6	168,5	22,0	8
100	4	116	86	157,0	254,0	31,7	1,6	200,0	22,0	8
125	5	127	77	185,5	279,5	35,0	1,6	235,0	22,0	8
150	6	130	80	216,0	317,5	36,5	1,6	270,0	22,0	12
200	8	150	90	270,0	381,0	41,1	1,6	330,0	25,5	12
250	10	156	96	324,0	444,5	47,7	1,6	387,5	28,5	16

13

STANDARD END-CONNECTIONS

FOR STAINLESS STEEL AND MONEL CORRUGATED HOSE FLOATING FLANGES ACCORDING TO **ANSI**

End-connections are TIG-welded to the corrugated stainless steel hoses. Stub-end in steel or type AISI 304 stainless steel. Flanges in steel, stainless steel or cold-resistant steel.

nominal I.D. dimensions in mm

Floating flange with stub-end.
Nominal diameter 10 to 100 mm

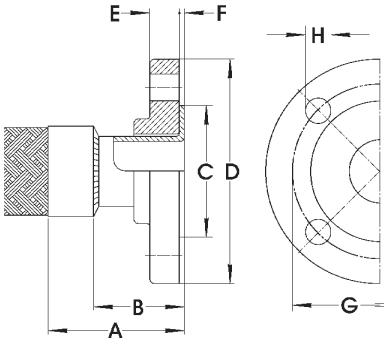

ANSI 150 lbs.										Nr of
mm	inch	A	B	C	D	E	F	G	H	Holes
12	1/2	64	51	35,0	89,0	9,6	2,11	60,5	16,0	4
20	3/4	67	51	43,0	98,5	11,1	2,11	70,0	16,0	4
25	1	72	51	51,0	108,0	12,6	2,77	79,5	16,0	4
32	1 1/4	72	51	63,5	117,5	14,1	2,77	89,0	16,0	4
40	1 1/2	77	51	73,0	127,0	15,9	2,77	98,5	16,0	4
50	2	94	64	92,0	152,5	17,5	2,77	120,5	19,0	4
65	2 1/2	94	64	105,0	178,0	20,8	3,05	139,5	19,0	4
75	3	98	64	127,0	190,5	22,3	3,05	152,5	19,0	4
100	4	108	76	157,0	228,5	22,3	3,05	190,5	19,0	8
125	5	200	150	185,5	254,0	22,3	3,40	216,0	22,0	8
150	6	200	150	216,0	279,5	23,8	3,40	241,5	22,0	8
200	8	235	175	270,0	343,0	26,8	3,80	298,5	22,0	8
250	10	270	210	324,0	406,5	28,6	4,20	362,0	25,5	12

Floating flange with stub-end.
Nominal diameter 125 to 250 mm

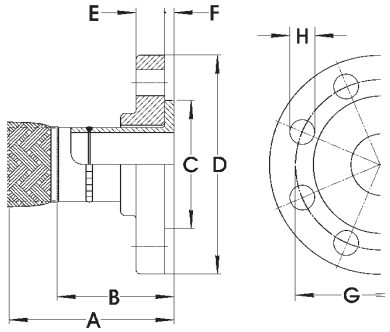

ANSI 300 lbs										Nr of
mm	inch	A	B	C	D	E	F	G	H	Holes
12	1/2	64	51	35,0	95,0	12,6	2,11	66,5	16,0	4
20	3/4	67	51	43,0	117,5	14,1	2,11	82,5	19,0	4
25	1	72	51	51,0	124,0	15,9	2,77	89,0	19,0	4
32	1 1/4	72	51	63,5	133,5	17,4	2,77	98,5	19,0	4
40	1 1/2	87	51	73,0	155,5	19,0	2,77	114,5	22,0	4
50	2	92	64	92,0	165,0	20,7	2,77	127,0	19,0	8
65	2 1/2	92	64	105,0	190,5	23,8	3,05	149,0	22,0	8
75	3	98	64	127,0	209,5	26,8	3,05	168,5	22,0	8
100	4	108	76	157,0	254,0	30,1	3,05	200,0	22,0	8
125	5	200	150	185,5	279,5	33,4	3,40	235,0	22,0	8
150	6	200	150	216,0	317,5	34,9	3,40	270,0	22,0	12
200	8	235	175	270,0	381,0	39,5	3,80	330,0	25,5	12
250	10	270	210	324,0	444,5	46,1	4,20	387,5	28,5	16

14

ANAMET EUROPE BV

Transformatorweg 30,
NL-1014 AK Amsterdam, Nederland
Tel.: + 31 20 - 5863586,
Fax: + 31 20 - 6881126
Website: www.anamet.nl
E-mail: sales@anamet.nl

ANAMET EUROPE